MULTI-LINGUAL

OPERATION MANUAL

POWERLINE MODELS 15XT SERIES

CO_2 Semiautomatic Repeater

.177 Cal. (4.5mm) Steel Airgun Shot Ⓢ
and 12 gm CO_2 Cylinders only

Daisy®
FIRST IN AIRGUNS.

⚠ WARNING: NOT A TOY. ADULT SUPERVISION REQUIRED. MISUSE OR CARELESS USE MAY CAUSE SERIOUS INJURY OR DEATH. MAY BE DANGEROUS UP TO 240 YARDS (220 METERS).

THIS IS A HIGH POWER AIR GUN RECOMMENDED FOR USE BY THOSE 16 YEARS OF AGE OR OLDER. READ ALL INSTRUCTIONS BEFORE USING. THE PURCHASER AND USER SHOULD CONFORM TO ALL LAWS GOVERNING USE AND OWNERSHIP OF AIR GUNS.

⚠ WARNING: THIS GUN CAN CAUSE SERIOUS INJURY OR DEATH. READ AND FOLLOW THE INSTRUCTIONS CAREFULLY. DO NOT INSTALL ANY BBs INTO THE GUN UNTIL YOU ARE READY TO SHOOT. IF YOU DO INSTALL BBs INTO THE GUN AND THEN DECIDE NOT TO SHOOT, EITHER MANUALLY REMOVE THE BBs FROM THE GUN OR SHOOT THE REMAINING BBs AT A SAFE TARGET. AN UNCOCKED, UNLOADED GUN IS SAFEST. ACCIDENTS HAPPEN FAST, AND ACCIDENTALLY INJURING OR KILLING SOMEONE IS A TERRIBLE THING. PLEASE SHOOT SAFELY.

⚠ This safety alert symbol indicates important safety messages in this manual. When you see this symbol, be alert to the possibility of personal injury and carefully read the message that follows.

The Model 15XT CO2 PowerLine® gun shoots with much more muzzle energy than the traditional spring air BB gun. More power means greater chance of serious injury or death. Use extreme caution when operating this gun.

Although your new PowerLine® gun is not a firearm, it has lethal potential and should be treated with the caution and respect due any conventional firearm. Like a firearm, your PowerLine® gun, when misused or carelessly used, can kill or seriously injure the shooter or other persons. All safeties are mechanical devices and the shooter is the only part of the system that can make a gun safe–or unsafe. **DON'T DEPEND ON MECHANICAL SAFETIES** – think ahead and avoid situations that might lead to accidents.

Guns differ in their operations and you are never ready to fire any gun until you are thoroughly familiar with it. Read the following operating instructions and **WITHOUT LOADING A PROJECTILE**, proceed several times through the operating steps with your gun (dry fire the gun at a safe target) so that you will be able to operate the PowerLine® 15XT properly and safely.

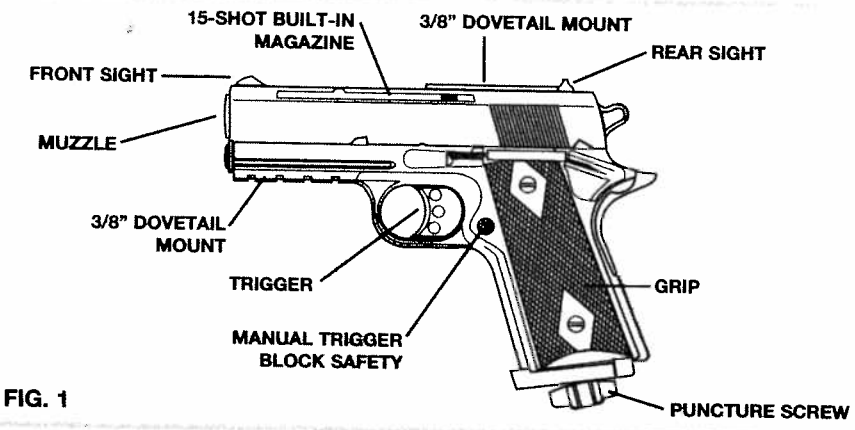

FIG. 1

PRIOR TO OPERATION

Put "ON" SAFE – NO RED SHOWING (refer to Operation Step 1, page 3).

OPERATION STEPS:

⚠ WARNING: Be sure gun is always pointed in a safe direction.

If desired, the gun may continue to be fired (Steps 5 and 6) until the built-in BB magazine is empty or the CO_2 cylinder needs to be replaced. Once the built-in BB magazine is empty, Steps 1,3,4,5,6, and 7 should be followed. If the CO_2 cylinder is empty, then all 7 Steps should be followed. (Approximately 150 shots can be expected per CO_2 cylinder).

NEVER STORE A LOADED GUN

At the end of a shooting session, as a safety precaution, always put "ON" safety – NO RED SHOWING (refer to step 1, page 3), remove CO_2 cylinder (refer to page 7) and remove BBs from the Built-in Magazine. (refer to page 8). Store in a safe place to prevent unauthorized use.

Step 1. PUT "ON " SAFETY – POSITION SAFETY SO NO RED IS SHOWING (refer to page 3).

Step 2. INSERT CO_2 CYLINDER (refer to page 4).

Step 3. FILL BUILT-IN MAGAZINE WITH A MAXIMUM OF 15 BBs (refer to page 5).

Step 4. AIM AT A SAFE TARGET (refer to page 6).

Step 5. TAKE "OFF" SAFETY – POSITION SAFETY SO RED IS SHOWING (refer to page 6).

Step 6. FIRE (refer to page 6).

Step 7. PUT "ON" SAFETY – POSITION SAFETY SO NO RED IS SHOWING (refer to page 6).

HOW TO OPERATE

⚠ WARNING: Be sure gun is always pointed in a safe direction. Never point the gun at anyone. Always assume and treat the gun as if it were loaded and ready to fire.

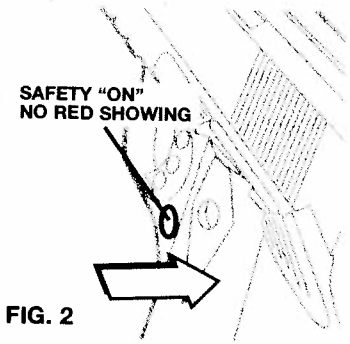

FIG. 2

STEP 1. PUT "ON" SAFETY – POSITION SAFETY SO NO RED IS SHOWING.

Push the safety button to the right toward the "SAFE" position – NO RED SHOWING (see Fig. 2). In this position, the trigger cannot be pulled to fire the gun.

⚠ CAUTION: Even when the safety is "ON" you should continue to handle the pistol safely. Don't point the gun at anything that you don't intend to shoot.

NOTE: The safety is not automatic. It will only do its job when you do yours. With the index finger out of the trigger area, move the safety to the "SAFE" position – NO RED SHOWING (see Fig. 2). **REMEMBER, THE BEST SAFETY IS GOOD GUN HANDLING.**

STEP 2. INSERT CO_2 CYLINDER

⚠ WARNING: Use only CO_2 cylinders which are the 12 gram type. Any attempt to use other sizes and/or cylinders containing other types of gas could be extremely dangerous. The use of gases other than CO_2 could result in an explosion or could rupture the gun, causing serious injury.

1. Always point gun in a safe direction. Put "ON" safe – NO RED SHOWING (see Operation Step 1, page 3).
2. Remove left grip cover by lifting at the bottom of the grip (see Fig. 3).
3. Turn puncture screw counterclockwise until there is enough room to insert a CO_2 cylinder.
4. Insert the CO_2 cylinder into the grip, first placing the larger end of the CO_2 cylinder into the lower portion of the grip (see Fig. 4).
5. Replace the left grip cover.
6. With muzzle pointed in a safe direction, turn puncture screw clockwise to puncture the CO_2 cylinder (see Fig. 5). Continue turning RAPIDLY until finger tight.

NOTE: A slight seepage of gas may occur until puncture screw is tight.

NOTE: REPLACE LEFT GRIP COVER BEFORE TIGHTENING THE PUNCTURE SCREW.

NOTE: We recommend the use of PowerLine® 12gm CO_2 cylinders.They are made to fit the Model 15XT. Other sizes of CO_2 cylinders may not fit properly and if you force them into place, it may result in injury to someone or damage to your pistol. Never try to force any CO_2 cylinder into place.

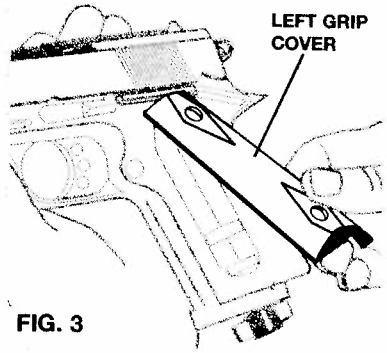

FIG. 3

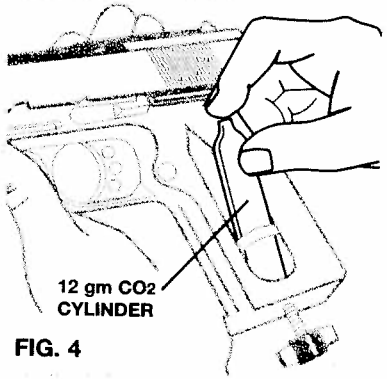

FIG. 4

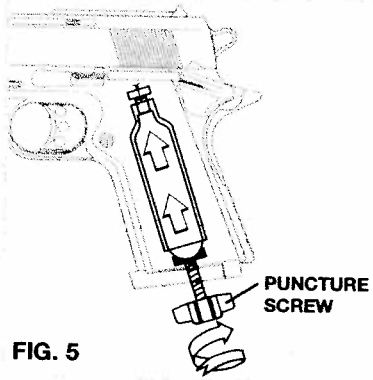

FIG. 5

STEP 3. FILL THE BUILT-IN MAGAZINE WITH A MAXIMUM OF 15 BBs

1. Always point gun in a safe direction. Insure that the gun is "ON" safe – NO RED SHOWING (see Operation Step 1, page 3).
2. Move the Built-in Magazine BB follower fully forward and hold in position as shown. (see Fig. 6)

   NOTE: Make sure the follower is HELD Fully FORWARD toward the muzzle OF THE GUN and THE SPRING IS Clear of the loading port Before Attempting to load BBs.
3. Once the Magazine BB follower is held fully forward, a maximum of 15 .177 caliber BBs can be individually inserted into the Magazine Loading Port as shown. (see Fig. 7)

⚠ CAUTION: Use only Max Speed™ BBs by Daisy®, or similar quality BBs that are labeled as such. Do not use lead pellets, buck shot, darts, ball bearings, or other foreign objects because they can cause injury to someone or may damage and/or jam the pistol.

4. After the Built-in Magazine has been loaded with a maximum of 15 BBs, slowly release the Built-in Magazine BB follower and allow it to rest up against the BBs. This will allow the BBs to be under spring tension (see Fig. 8).

   NOTE: SLOWLY RELEASE THE BUILT-IN MAGAZINE BB FOLLOWER – DO NOT ALLOW IT TO SNAP REARWARD.

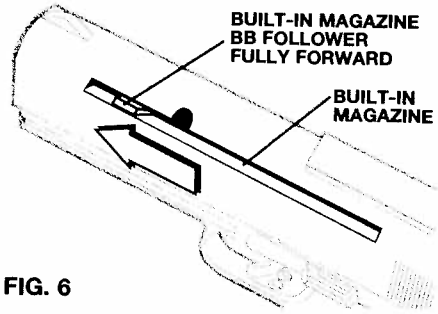

FIG. 6

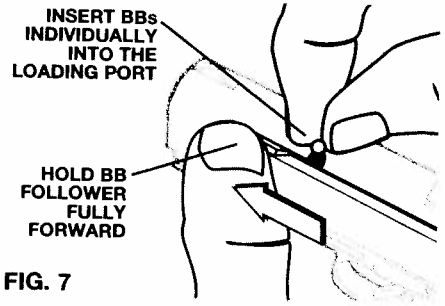

FIG. 7

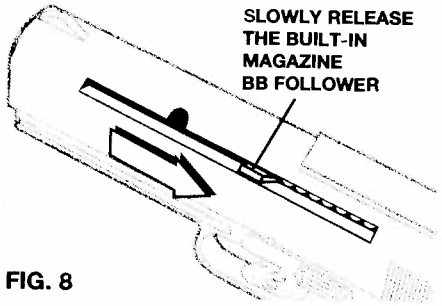

FIG. 8

⚠ WARNING: Once the Built-in Magazine is loaded with BBs it is considered to be loaded, so use extreme caution in handling the gun. Keep the gun pointed in a safe direction. Never point the gun at anyone. **Always treat the gun as if it were loaded and ready to fire.**

STEP 4. AIM AT A SAFE TARGET

To be a consistent marksman, use the correct sight picture each time you fire the pistol (see Fig 9).

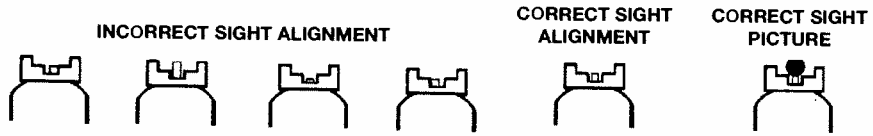

FIG. 9

⚠ **CAUTION:** Due to the power of the Model 15XT, use extra precaution in selecting a safe target. Improper targets may cause ricochet.

STEP 5. TAKE "OFF" SAFETY - POSITION SAFETY SO RED IS SHOWING.

When you are certain that the target, back-stop and surrounding area is safe, position the safety "OFF" – RED SHOWING (see Fig. 10). Pulling the trigger now will fire the gun.

⚠ **WARNING:** Use extreme caution in operating because the gun is now ready to fire a BB when the trigger is pulled.

STEP 6. FIRE

Make sure the gun is pointed at a safe target. Once the last BB has been shot from the gun, it is still possible for the trigger to be pulled, but only CO_2 will be discharged.

STEP 7. PUT "ON" SAFETY - POSITION SAFETY SO NO RED IS SHOWING.

After firing, return the safety to the "ON" position – NO RED SHOWING (see Fig 11).

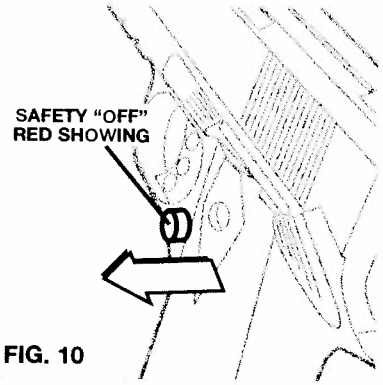

FIG. 10

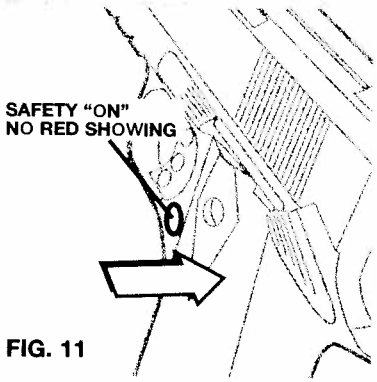

FIG. 11

BB DOES NOT FIRE

⚠ **WARNING:** If a BB does not fire after completing the operation steps, do not assume that the gun is unloaded. Keep the gun pointed in a safe direction.

MAKE THE FOLLOWING CHECKS IF A BB DOES NOT FIRE

1. Did the Built-in Magazine contain .177 cal. Daisy® Max Speed™ or similar quality BBs? If not, fill the Built-in Magazine with BBs and repeat the operation steps.
2. Was the safety "OFF" – RED SHOWING, when the trigger was pulled? If not, repeat the operation steps.
3. Was a CO_2 cylinder installed? If not, put "ON" safe – NO RED SHOWING, and insert a new CO_2 cylinder. Repeat the operation steps after the new cylinder is installed.
4. Refer to the section on CO_2 characteristics (see page 8).
5. ⚠ If the pistol still does not fire, refer to warning below.

WARNING: If the pistol still fails to shoot a BB after checking the five items above, there is a malfunction in the pistol. This could represent a dangerous condition. There could be BBs in the pistol even though a BB did not shoot out. Al Always treat the gun as if it were loaded. At no time should you look down the barrel of the gun. Put "ON" safe – NO RED SHOWING, remove the CO_2 cylinder, and send the pistol directly to DAISY MANUFACTURING SERVICE DEPARTMENT. Refer to section on REPAIRS OF DAISY GUNS.

HOW TO UNLOAD

After a shooting is complete, the gun should be unloaded before storing it. To unload the gun always put "ON" safe – NO RED SHOWING, remove the CO_2 cylinder, and remove the BBs from the Built-in Magazine. See details below ⚠

CAUTION: Even though you have gone through an unloading procedure, continue to treat the gun as though it were loaded. Don't point at anything you don't intend to shoot. Always put "ON" safe – NO RED SHOWING.

REMOVE CO_2 CYLINDER

1. Put "ON" safe – NO RED SHOWING. (see Operation Step 1, page 3).
2. With the muzzle pointed in a safe direction and the left-hand grip cover still in place, slowly turn puncture screw counterclockwise allowing any remaining gas to be discharged and continue turning screw until end stop is reached (see Fig. 12).
3. Remove left-hand grip cover by lifting at the bottom of the grip.
4. ⚠ Remove and properly dispose of CO_2 cylinder.

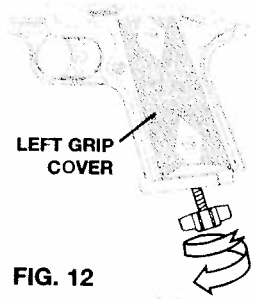

FIG. 12

CAUTION: Never attempt to reuse a CO_2 cylinder for any purpose.

REMOVE BBs FROM BUILT-IN MAGAZINE

1. Put "ON" safe – NO RED SHOWING. (see Operation Step 1, page 3).
2. Push and hold the Built-in Magazine follower fully toward the front.
3. Invert the gun and let the BBs fall out of the magazine through the loading port.

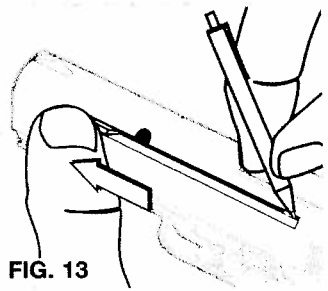

FIG. 13

4. Look inside the Magazine slot on top of the gun. If a BB is visible, use a ballpoint pen, screwdriver, etc. to remove the BB from the gun as shown (see Fig.13).

CAUTION: Do not assume that the gun is empty of BBs when the BBs are removed from the gun. Verify that all BBs are removed as illustrated in Fig. 13. **Always treat the gun as if it were loaded and ready to fire.**

CO_2 CHARACTERISTICS

There are occasions when a CO_2 pistol may be subjected to abnormal conditions that can produce effects on the pistols performance. These conditions include operation and/or storage of the pistol at temperatures that are considerably higher or lower than normal outdoor temperatures (60 – 70 degrees F), as well as conditions of rapid fire.

1. High temperatures can produce pressure in the CO_2 cylinder and gun that is considerably higher than normal operating pressure. Such increased pressure may prevent the pistol from firing and may result in permanent damage to the gun. The maximum operating or storage temperatures can easily be reached if the gun is left directly in the sun on a bright, sunny day. Therefore the shooter should not expose the pistol to high temperature conditions or direct sunlight for any extended period of time.
2. Rapid firing of the gun will cause temperature reduction in the pistol and CO_2 gas. This will result in lower BB velocities and may even lower gas pressure enough so that the pistol will not fire. This condition can be avoided by allowing more time between shots. This permits the gas to increase in temperature and pressure, and produce normal velocities.
3. During rapid fire, the muzzle velocity of each shot can be expected to decrease. This can be detrimental to shooting accuracy.
4. Care should be exercised to ensure that the gun is not shot with a CO_2 cylinder that is low in pressure because a BB may not be expelled from the barrel.

STORAGE

Store your pistol unloaded. Put "ON" safe – NO RED SHOWING, remove CO_2

cylinder and remove all BBs from the pistol's Built-in Magazine. Keep pistol away from children and untrained shooters. Store BBs, and CO_2 cylinders separately from the pistol to keep them from untrained shooters.

WARNING: A CO_2 cylinder contains gas under pressure, whether or not it has been inserted into a gun. If exposed to high temperatures (such as inside of a closed car in direct sunlight), it could explode. Be sure to store all cylinders in a cool place.

PROPER CARE

With care and periodic cleaning, your Model 15XT will provide many years of shooting enjoyment. As is the case with conventional firearms, abuse, neglect, and continued exposure to the elements will impair the performance of any airgun. Learn to take care of your Model 15XT and it will serve you well.

CAUTION: Never attempt to clean the Model 15XT until the gun is "ON" safe – NO RED SHOWING, the CO_2 cylinder has been removed, and the BBs have been removed from the Built-in Magazine.

EXTERIOR PARTS

All the plastic parts may be cleaned with a damp rag and mild soap or detergent. Avoid using strong detergent, abrasive cleaning compounds or solvents that may scratch or otherwise damage surfaces. The exposed metal parts should occasionally be wiped clean using a soft cloth that is lightly oiled with clean motor oil.

LUBRICATION

Your Model 15XT was lubricated when built and should not require any additional lubrication.

MODIFICATION

CAUTION: The components of this gun were engineered to deliver optimum performance. Any modification or tampering with a gun may cause a malfunction and may make it unsafe to use. Any change in performance (such as a lowered trigger pull force and shortened trigger travel), indicates possible modification, tampering and/or wear. Such a gun should be inspected, replaced or properly repaired by qualified personnel. Any gun that has been dropped should be checked by qualified personnel to ensure that its function has not been affected.

REPAIR OF POWERLINE® GUNS

⚠ WARNING: A GUN THAT IS NOT OPERATING PROPERLY MAY BE DANGEROUS. IT SHOULD BE KEPT SAFELY FROM USE BY ANYONE UNTIL REPAIRED OR DESTROYED. DO NOT TRY TO TAKE THE GUN APART. IT IS DIFFICULT TO REASSEMBLE, AND IMPROPER REASSEMBLY CAN CAUSE A HAZARDOUS CONDITION.

GUNS IN WARRANTY

LIMITED ONE-YEAR WARRANTY

For one year from date of purchase, Daisy will repair or replace and return this gun, free of charge, if defective in material or workmanship. Service is available by returning the gun to Daisy Manufacturing Co. (refer to important note below). Attach to the gun, your name, address, and telephone number, description of problem and proof of date of retail purchase (sales slip). Package and send transportation prepaid to Daisy Manufacturing Co. This Warranty gives you specific legal rights, and you may also have other rights which may vary from state to state.

IMPORTANT: You can return your inoperative pistol to Daisy for repair via the U.S. Mail or United Parcel Service. Be sure to put "ON safe – NO RED SHOWING, remove the CO_2 cylinder and unload all BBs from the Built-in Magazine before returning the pistol to Daisy. You must include your street address for Daisy to send your pistol directly back to you through UPS delivery.

GUNS OUT OF WARRANTY

If your PowerLine® needs repair, please call 1-800-713-2479 for repair charges. Daisy will repair the gun or replace it with a reconditioned gun of the same model, if available; otherwise, with a model of equivalent quality.

Daisy Outdoor Products
Service Department
11823 Lime Kiln Rd.
Neosho, MO 64850

MODEL 15XT CO_2 PISTOL SPECIFICATIONS

ACTION	**CO_2 powered semi-automatic**
CALIBER	**.177 cal. (4.5mm) BB**
SIGHTS	**Blade and ramp front, fixed open rear**
AMMO CAPACITY	**15-shot built-in magazine**
SAFETY	**Manual trigger block**
BARREL	**Smooth bore**
MUZZLE VELOCITY	**425 fps. (130 mps)**
SHOOTING DISTANCE*	**240 yds. (220 m)**
OVERALL LENGTH	**7.21 in. (18.32 cm)**
WEIGHT	**1 lb. (.46 kg) empty**
POWER SOURCE	**PowerLine® 12gm CO_2 cylinder**

*With muzzle pointed upward at optimum angle

⚠ CAUTION: CO_2 cylinders may explode at temperatures above 160°F (71°C).